Parts List				
ITEM	QTY	PART No.	DESCRIPTION	MATERIAL
1	1	BB5168	Ø43 SP Rec 20k Long-term MP 9/16"	S32750 SUPER DUPLEX

NOTE: 1
DESIGN CODE:
API 17H TYPE 1
API 6A (PSL 3)

NOTE: 2
TECHNICAL CLASSIFICATION:

Article Type:	001-Hot Stabs
Main Group:	1.03. Ø43 Hot Stab
Intermediate Group:	1.2.02. Receptacle
Sub Group:	1.2.6.01. Single

NOTE: 3
INTERFACE INFORMATION:

Pressure Rating Bar:	1380
Design Water Depth:	N/A
Material:	S32750 SUPER DUPLEX
Weight in Air:	4,6 kg
Volume:	0,58 dm^3
Submerged Weight:	3,96 kg
Surface Area:	620 cm^2
Hydraulic:	9/16" MP Autoclave
Mechanical:	4xM10@PCD 86
Electrical:	N/A
Com. & Protocol:	N/A

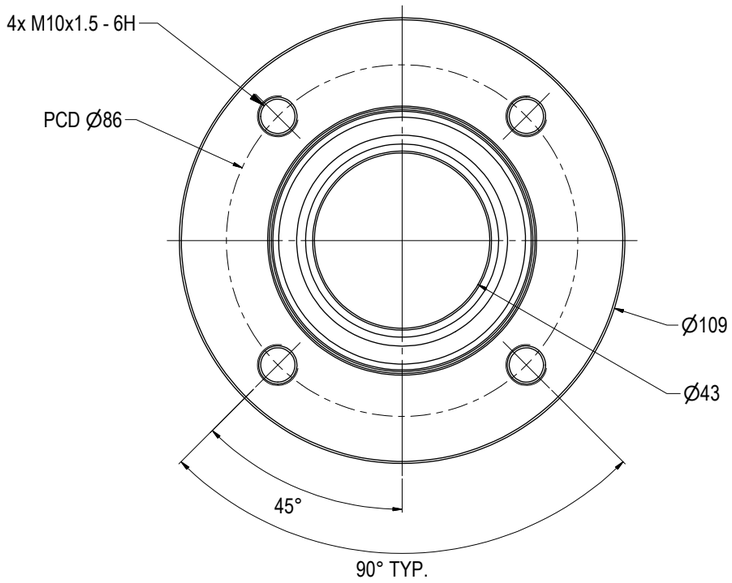

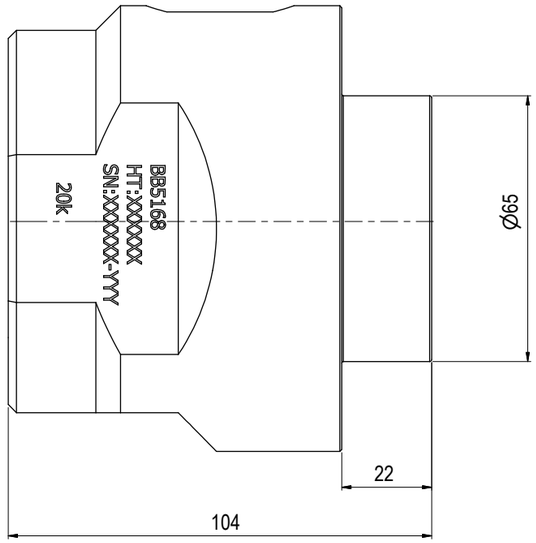

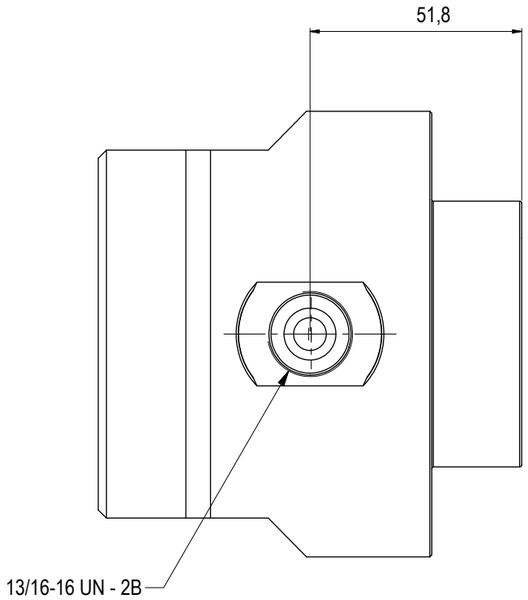

Rev.	Date	Reason for issue	Revision change	Made	Chk'd	Appr.
01	16.2.2021	9-IFU (Issued for Use)		WTJ	HNJ	WTJ

BLUE LOGIC

This Drawing is the Property of Blue Logic AS © and must Not be Loaned, Reproduced or Transferred to others without written Permission

Unless Noted Otherwise:	Dwg Scale: NTS	Drawing title: Ø43 SP Rec 20k Long-term MP 9/16"	
Dim. Tol: NS-ISO 2768-1	Dwg Proj:		
Roughness: Ra	Dwg Format: A3		
Fillet Rad: Corner Rmax:	Break Edges: (R. Alt. 45°) R= 0,1-0,5	Drawing number: BB5168	Rev. 01